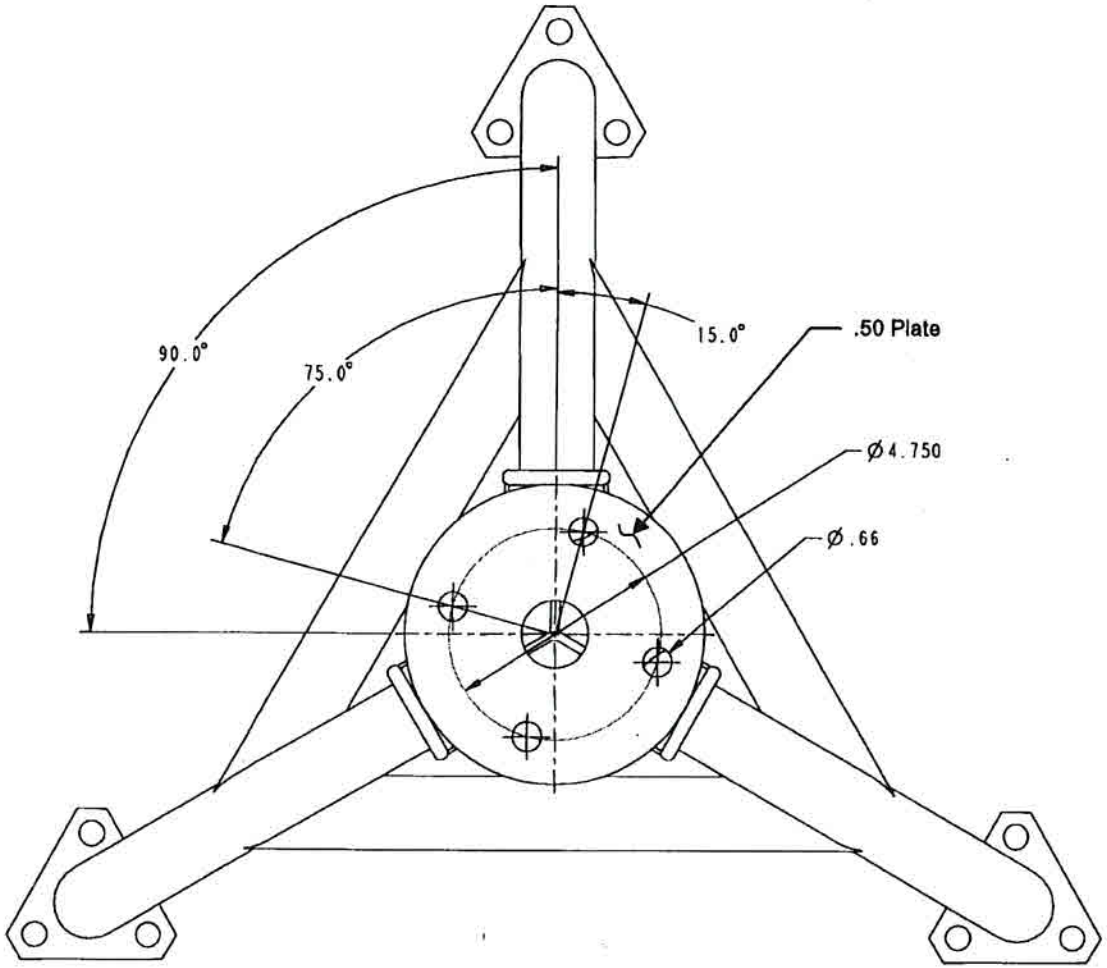

Test Fixture Interface Drawing